MONARCH

MONARCH PRODUCTS COMPANY, INC.

YORK HAVEN, PA.

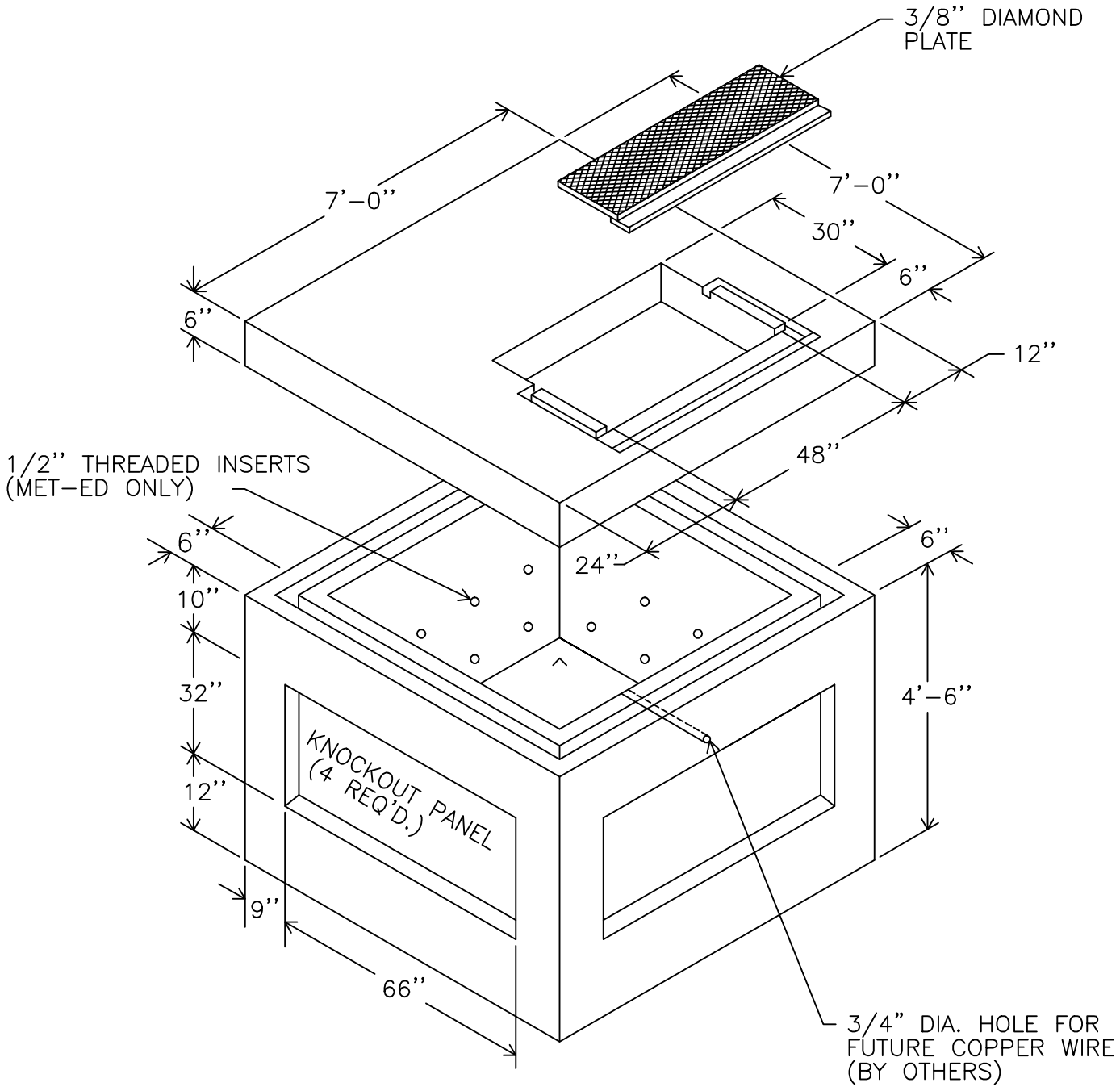

PRECAST TRANSFORMER FOUNDATION

DWG. 664