MONARCH

MONARCH PRODUCTS COMPANY, INC.

YORK HAVEN, PA.

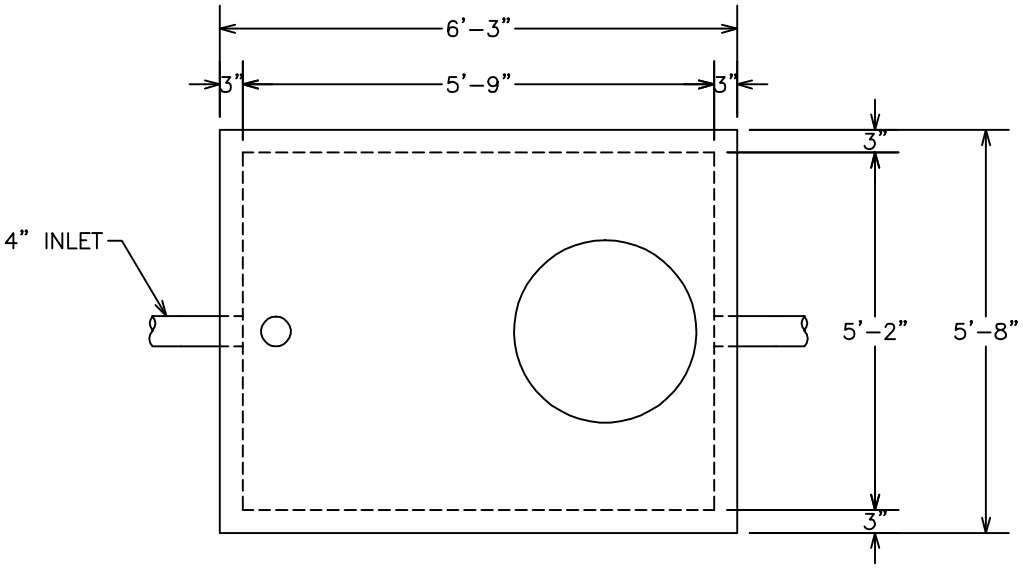

—PLAN—

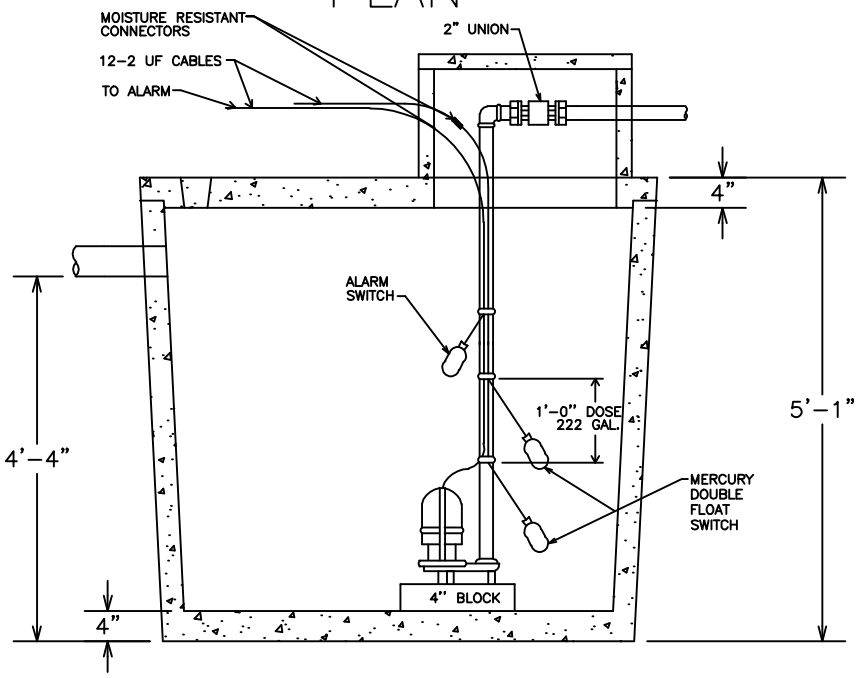

—SECTION—

750 GALLON PUMP TANK WITH PUMP	PT-750R