MONARCH

MONARCH PRODUCTS COMPANY, INC.

YORK HAVEN, PA.

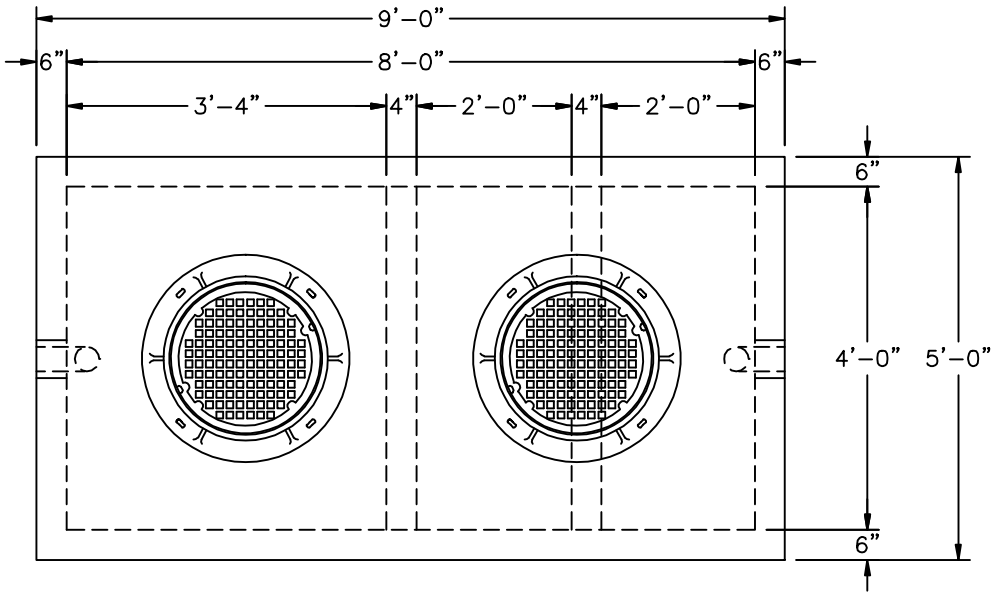

–PLAN–

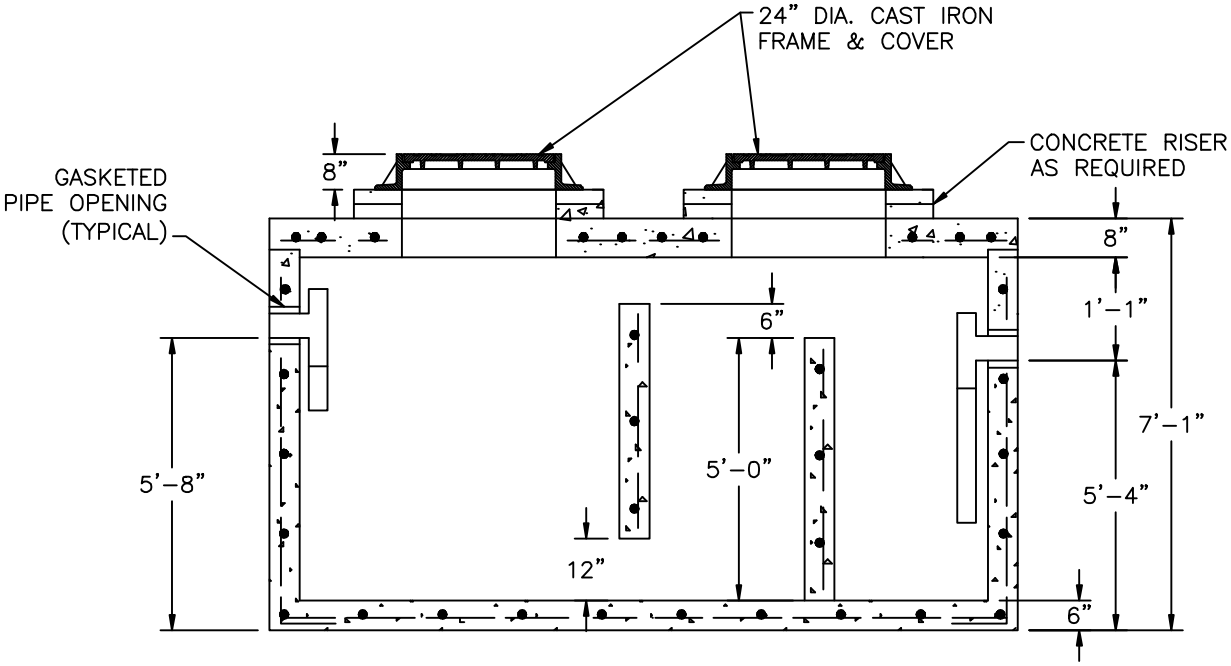

–SECTION–

1000 GALLON COMMERCIAL GREASE INTERCEPTOR

DWG. G–3